PORTABLE COMPRESSOR KIT

OPERATION GUIDE

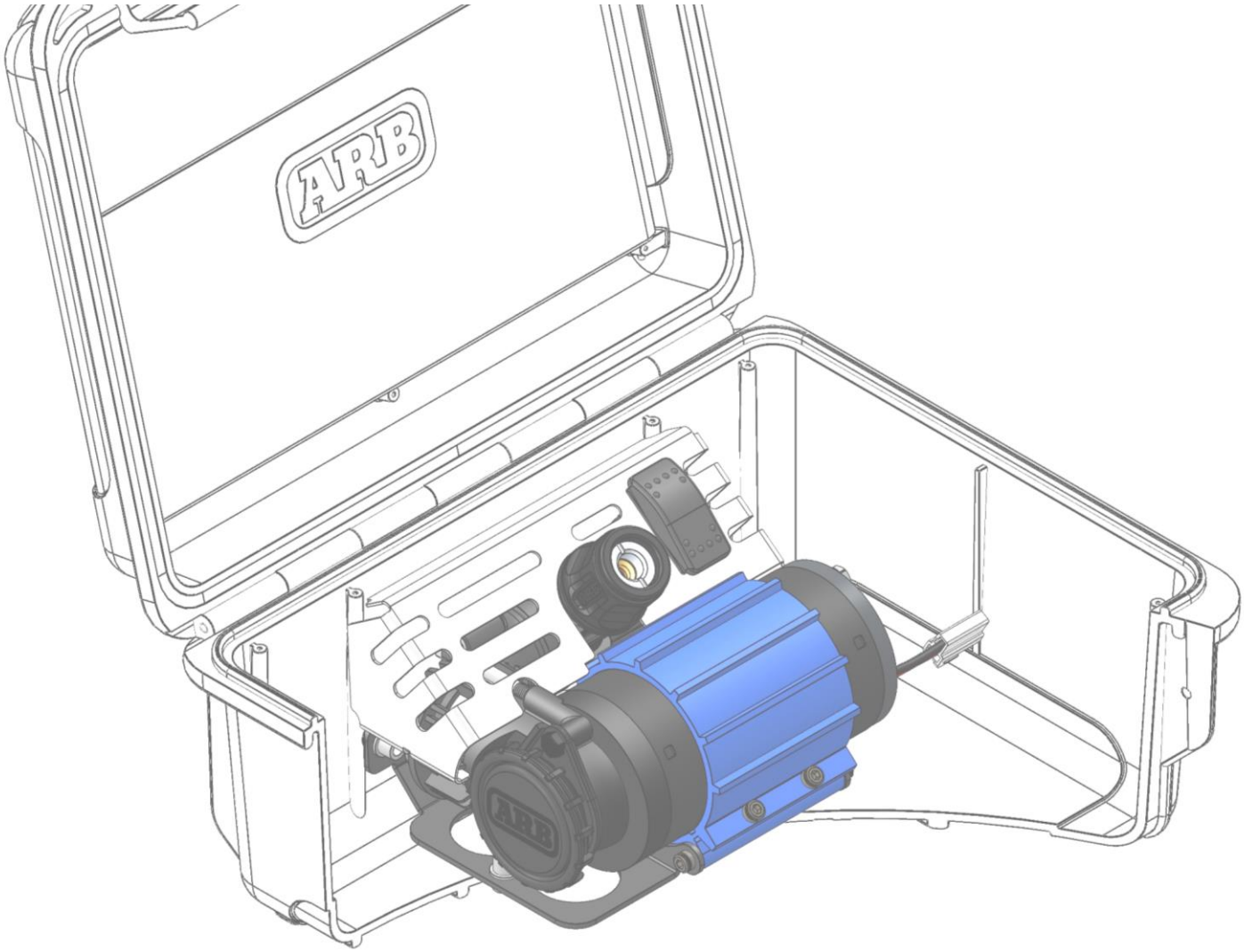

CKMP12V2

Part No. 2102MP12V2
Revision Date 30/10/2025
Copyright © 2023 by ARB Corporation Limited

No liability is assumed for damages resulting in the use of the information contained herein.
ARB Air Locker Air Operated Locking Differentials, ARB Air Locker Air Activation System and Air Locker are trademarks of ARB Corporation Limited.
Other product names used herein are for identification purposes only and may be trademarks of their respective owners.

EC Declaration of Conformity

This declaration of conformity is issued under the sole responsibility of the manufacturer.
This declaration relates to these products:
CKMP12V2

The products are in conformity with the following standards or standardized documents:
EN 55014-1 : 2003 (AS/NZS CISPR 14.1)
EN 55014-2 : 2003 (AS/NZS CISPR 14.2)

According to the provisions of the directives:
2004/108/EC (EMC directive).

Technical file at:
ARB Corporation Ltd, 42-44 Garden St, Kilsyth, Victoria, Australia.

Signed for and on behalf of ARB Corporation Ltd

Andrew Brown
Managing Director
Melbourne, March 2016

ARB 4x4 ACCESSORIES
Corporate Head Office

42-44 Garden St
Kilsyth, Victoria
AUSTRALIA
3137

Tel: +61 (3) 9761 6622
Fax: +61 (3) 9761 6807

Australian enquiries **sales@arb.com.au**
North and South American enquiries **sales@arbusa.com**
Other international enquiries **exports@arb.com.au**

www.arb.com.au

Table of Contents:

1 Introduction 2

1.1 What Is Included 2
1.2 Features of the CKMP12V2 Portable Compressor 3
1.3 Specifications of the CKMP12V2 Portable Compressor 4

2 Safe Air Compressor Operation 5

2.1 Connecting for Use 5
2.2 Safety Precautions 6
2.3 Tyre Filling 7
2.4 Understanding the Built-In Protection Devices 8

3 Service & Maintenance 9

3.1 Air Filter Service 9
3.2 Electrical Fuse Replacement 10
3.3 Safety Valve Service 10

4 Parts List 11

4.1 Exploded Diagram 11
4.2 Itemized Parts List 12

1 Introduction

IMPORTANT:

For the safest and most effective service from this portable air compressor, please read this guide in its entirety before attempting actual use.

HINT: **Place a ✓ mark inside each of the ☐ symbols as you follow each step so that you don't miss any.**

1.1 What Is Included

Below is a detailed list of items included with this kit:

- ☐ Fully assembled and performance tested air compressor mounted into a waterproof and impact resistant polymer case.
- ☐ Handy storage pocket in the case.
- ☐ OEM quality illuminated compressor isolating switch.
- ☐ High quality wiring loom with automotive grade alligator clamp type battery contacts, and a pressure switch driven automotive relay control circuit.
- ☐ Splash resistant air filter with washable high-flow sintered bronze filter cartridge.
- ☐ 7 meter [23 ft] long high quality abrasion and heat resistant air hose with male to female couplings.
- ☐ Hose couplings are specially designed corrosion resistant, one-handed (push-lock) quick connect type to suit US industrial standard air fittings (Ref: compatible types Section 1.3).
- ☐ Inflation accessories kit including high-flow tyre filler attachment (US industrial standard) with integral stop-valve, a Schrader valve to US industrial standard adaptor, and extra nozzle attachments for inflating items such as sports balls, air mattresses, etc.

1.2 Features of the CKMP12V2 Portable Compressor

The ARB CKMP series portable air compressor is a world class recreational product designed and built to commercial / industrial standards boasting the following features:

- ☐ Ultra compact design makes this the highest flowing portable compressor in its class.
- ☐ Constructed entirely of light weight, high strength engineering grade materials, including military and aerospace standard components.
- ☐ Fully sealed components for moisture and dust resistance.
- ☐ Motor is 100% ball bearing equipped, and features a unique linear brush pre-load system for extra long life, low heat and quiet operation throughout the life of the unit.
- ☐ Motor is thermal cut-out protected against damage caused by extreme temperature use.
- ☐ Pressure switch and 40 amp automotive relay equipped electrical system prevents run-on when not filling, or any damage to compressor or hoses as a result of the pressure generated from a kinked air line.
- ☐ Illuminated isolating switch is easy to see at night, and protects the user from hazardous sparking when connecting the alligator clips to the battery terminals.
- ☐ Heavy duty Maxi-Fuse equipped power leads for professional in-line circuit protection.
- ☐ Hard-anodized cylinder bore and PTFE (Teflon) impregnated carbon fiber piston seal for reduced friction and maximum trouble free life.
- ☐ Compressor piston is equipped with a German made high shock rated cylindrical roller bearing.
- ☐ High density and high flow washable sintered bronze air filter element.
- ☐ Over-pressure safety valve equipped as a back-up protection from either pressure switch failure, thermal over pressure generated in a hot vehicle (i.e., no need to drain pressure when finished use.), or accidental connection to an external high pressure source.

1.3 Specifications of the CKMP12V2 Portable Compressor

GENERAL SPECS		METRIC		IMPERIAL	
SUPPLY VOLTAGE		12	Volts DC	12	Volts DC
MAX CURRENT DRAW		32	Amps @ 690 KPa	32	Amps @ 100 PSI
FUSE RATING (Maxi-Blade type)		40	Amps	40	Amps
RELAY RATING		40	Amps	40	Amps
WEIGHT (total kit)		7.0	Kgs	15.4	Lbs
DIMENSIONS	-LENGTH	356	mm	14.02	inches
	-WIDTH	308	mm	12.13	inches
	-HEIGHT	182	mm	7.17	inches
DUTY CYCLE @ 22°C [72°F]		50	%	30	min. per hour
PRESSURE SWITCH CLOSED		< 520	KPa	< 75	PSI
PRESSURE SWITCH OPEN		> 725	KPa	> 105	PSI
SAFETY VALVE PRESSURE		> 1035	KPa	> 150	PSI
MOTOR THERMAL CUT-OUT		115	degrees C	239	degrees F
MAX. AMBIENT TEMPERATURE		100	degrees C	212	degrees F

NO LOAD SPECS	METRIC @ 0 KPa		IMPERIAL @ 0 PSI	
CURRENT DRAW	13	Amps	13	Amps
AIR FLOW RATE	75.1	L/min.	2.65	CFM

SPECS @ TYRE PRESSURE	METRIC @ 200 KPa		IMPERIAL @ 29 PSI	
CURRENT DRAW	22.9	Amps	22.9	Amps
AIR FLOW RATE	61.6	L/min.	2.18	CFM

NOTE: The specifications above were recorded under laboratory conditions at 22°C [72°F].

EXTERNAL CONNECTIONS SPECS	
AIR INTAKE THREAD (female)	1/4-18 NPSC (parallel pipe thread)
AIR FILTER THREAD (male)	1/4-18 NPT (tapered pipe thread)
PRESSURE SWITCH THREAD	1/4-18 NPT (tapered pipe thread)
SAFETY VALVE PORT THREAD	1/8 BSPP (parallel pipe thread)
MANIFOLD THREAD	1/4-18 NPT (tapered pipe thread)
AIR COUPLING FITTING TYPE (international equivalent standards)	'US Industrial Standard' ISO 6150 B Rectus series 23/24/1400 Tema series 1400 Legris series 23 DYNAQUIP D3 CEJN 310 US.MIL.C 4109 Norma / AFNOR: NF.E49.053 Parker series 30-¼" and 20-¼" Aignep 220 Hansen series 3000 Norgren series 237 Gromelle series 600

WARRANTY

This ARB Air Compressor is designed to provide many years of trouble free recreational use, and is warranted to be free from manufacturing defects for two (2) years from the date of purchase.

2 Safe Air Compressor Operation

2.1 Connecting for Use

- ☐ Position the compressor on a sturdy flat surface before opening the box.
- ☐ Unlock and open the box using the two toggle clamps.
- ☐ Make sure that the switch is in the 'OFF' position by pressing down on the top of the switch rocker.
- ☐ Uncoil the power lead and connect the positive (+) alligator clamp (RED handle) directly to the positive (+) terminal of the vehicle's 12 volt battery.
- ☐ Connect the negative (-) alligator clamp (BLACK handle) directly to the negative (-) terminal of the vehicle's 12 volt battery.

NOTE: **The switch should now be illuminated but the compressor will not start until the switch rocker is pressed on the bottom. This tells you the compressor has now been connected to power.**

- ☐ Attach the air hose to the compressor by inserting the male end of the hose into the hose coupling on the compressor and pressing inward until the coupling sleeve clicks forward. The sleeve of the coupling does not need to be pulled back by hand.
- ☐ Attach the tyre filler (or other compatible device) to the opposite end of the hose in the same way.
- ☐ Press the bottom of the rocker switch down to start the compressor and pressurize the manifold and hose.

NOTE: **Once compressed air has expelled through the attached device (e.g., tyre filler, air tool, etc.) the compressor should automatically start running. It will continue to run until air use has stopped and the pressure in the manifold and hose reaches the pre-set pressure switch cut-out level.**

2.2 Safety Precautions

Please carefully read and abide by each of the following points when using a portable air compressor.

- ☐ Never make connections to the battery with the isolating switch turned 'ON' as the resulting sparking at the battery terminals could pose a fire hazard.
- ☐ Never attempt to stop or slow the flow of compressed air using direct exposure to skin.

NOTE: **Normal textile clothing does not protect the skin against the risk of air embolism posed by exposure to compressed air.**

NOTE: **An air embolism is a serious condition of the blood stream which may result in severe injury or death.**

- ☐ For the same reason as above, never use compressed air to clean clothing, hair, or body.
- ☐ Wear suitable protective equipment (e.g., glasses, face shields, etc.) to control the risk of injury due to projectile particles.
- ☐ Never point the hose at anyone and always see that bystanders are out of the line of air flow.
- ☐ If using extension or replacement hoses other than genuine ARB hoses, use only sound strong hose with secure couplings and connections having a high temperature rating and a burst pressure of over 1380 Kpa [200 PSI].
- ☐ If using compressed air accessories (e.g., extension or replacement hoses, or pneumatic devices like air tools) other than genuine ARB, avoid the danger of spontaneous disconnection by using only products with hose fittings that conform to one of the international standards listed in the specifications (ref: Section 1.3).
- ☐ Air hoses should be securely held to prevent whipping.
- ☐ Compressed air contains contaminants which makes it unsuitable for use in air-supplied respiratory protective devices such as spray painting hoods. Only use compressed air with such devices when appropriately filtered through approved filtration equipment.

2.3 Tyre Filling

☐ Connect the compressor to the vehicle's battery or another 12V DC power supply as in Section 2.1.

NOTE: **If the vehicle is in a well ventilated area, leaving the vehicle running at idle while running the compressor will give maximum compressor performance and avoid depleting your vehicle's battery.**

☐ Attach the supplied tyre filler to the air hose coupling by inserting the male end of the filler into the hose coupling and pressing inward until the coupling sleeve clicks forward. The sleeve of the coupling does not need to be pulled back by hand at all.

☐ Press the bottom of the rocker switch down to start and pressurize the compressor.

NOTE: **ARB's tyre filler attachment is equipped with a stop valve. Air will not pass through the tyre filler attachment until it is connected to a tyre valve.**

☐ Attach the tyre filler attachment to any standard tyre valve by pushing the filler onto the tyre valve until a seal is made.

NOTE: **The compressor should automatically start once air passes through the filler.**

☐ To stop filling and remove the filler from the valve, push the silver filler body toward the tyre, then pull back on the black filler collar. This will release the filler's grip on the valve.

NOTE: **Periodically disconnect the filler and check the tyre pressure with an automotive tyre pressure gauge.**

IMPORTANT:

Do not fill your tyres over the manufacturer's specified maximum pressure rating.

☐ To protect the tyre valve, always refit the tyre valve cap once you have inflated your tyres to the desired pressure.

2.4 Understanding the Built-In Protection Devices

This compressor has been equipped with both THERMAL and OVER PRESSURE protection devices in the interests of personal safety and to protect the unit from unnecessary internal damage.

NOTE: **Never disable or modify any of the compressor's built-in protection devices.**

2.4.1 Thermal Cutout Switch

Heat is generated by the air compression process. This heat generation is increased accordingly by increasing the compressed air flow rate or increasing the pressure level of the air flow.

The large DC electric motor inside the compressor is also a source of heat which increases with the amount of work being done by it.

The compressor has been designed to naturally disperse this heat into the air around it, however, the ambient temperature will affect how fast this heat can be dispersed. If excessive levels of heat are allowed to build up inside the compressor the unit may be at risk of internal damage. For this reason, an internal electric switch has been designed into the back of the motor which will turn the compressor off if the temperature approaches a dangerous level, and will automatically reset and turn the compressor back on once the unit has cooled down to a safe temperature. This off time may last anywhere from just a few minutes up to half an hour depending on conditions around the compressor.

2.4.2 Over Pressure Safety Valve

This compressor is equipped with a pressure operated electric switch which has been factory set to turn off the compressor at a safe level of pressure, and then turn it back on again once the pressure has been exhausted down to a lower level. Should this switch fail for any reason the compressor may generate pressure well beyond its safe shut off limit.

A compressor which has reached its safe pressure maximum that has been left in direct sun or inside a hot vehicle may build up additional pressure past the safe working level.

Connecting your compressor up to any air system which might already contain a residual pressure that is higher than the compressor's safe pressure limit may raise the internal pressure of the compressor past the safe pressure limit.

This compressor is equipped with a mechanical over pressure safety valve which has been factory set to bleed off to atmosphere any excessive pressure buildup (i.e., from any of the situations above) before it can pose any personal danger or cause damage to compressor components.

3 Service & Maintenance

3.1 Air Filter Service

The CKMP12V2 Portable Air Compressor comes factory fitted with a high density, high flow, sintered bronze air filter to protect the compressor components, and any accessories that might be used with the compressor, from damage caused by the ingress of dirt and fine dust particles. The filter element is removable and cleanable and should provide for years of continuous service.

Follow the steps below to disassemble, clean, and re-assemble the air filter.

- ☐ Unsnap and remove the air filter cover from the air filter base by applying slight prying pressure under the fingers of the cover.
- ☐ Remove the filter element disk.
- ☐ Vigorously wash the element in a solution of hot soapy water.
- ☐ Rinse the element in pure hot water.
- ☐ Dry the element thoroughly.
- ☐ Insert the element back into the air filter base making sure that the flattest face of the disk faces toward the compressor.
- ☐ Snap the air filter cover back onto the base and rotate the cover into the desired position.

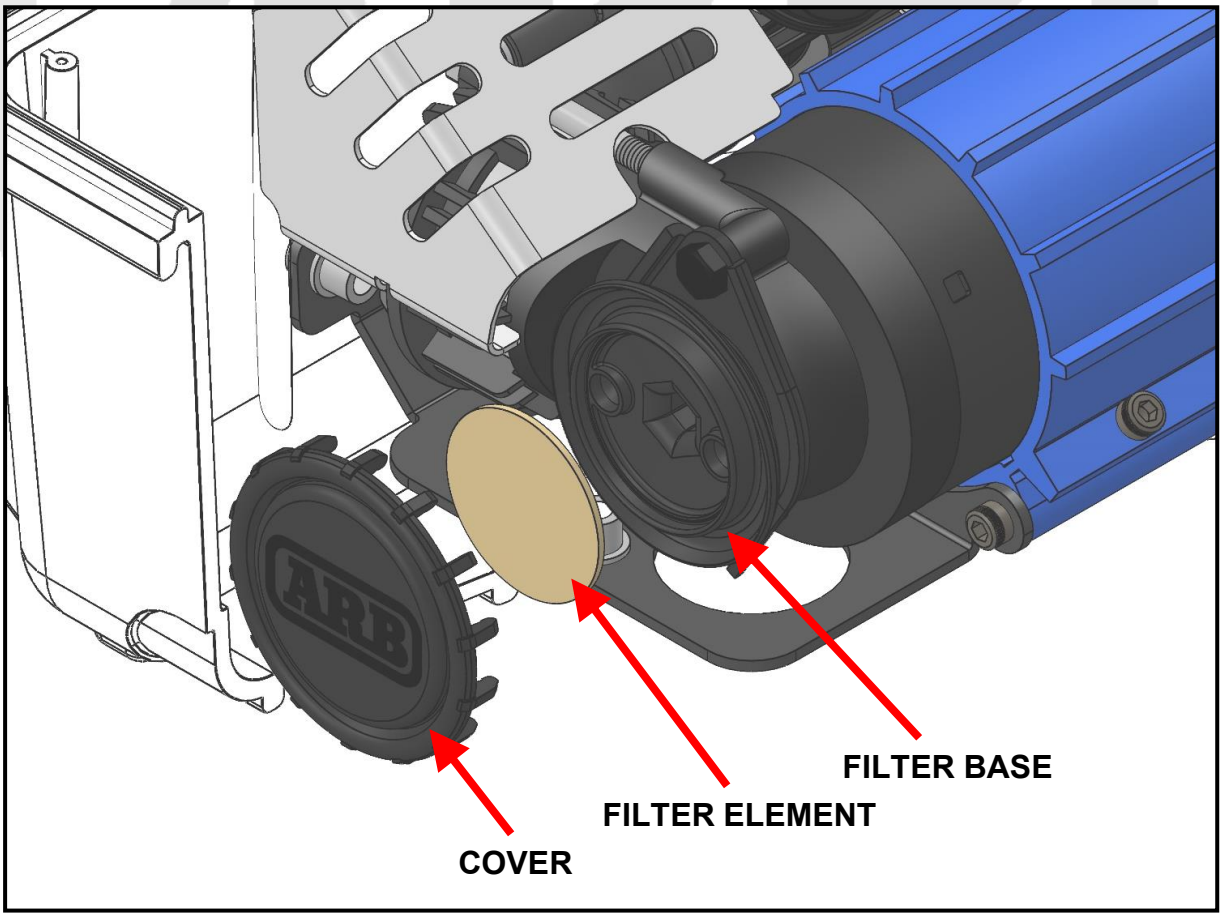

3.2 Electrical Fuse Replacement

If the electrical fuse that is installed inline with the positive (+) power lead (RED) requires replacing, it can be removed by opening the black rubber fuse housing cover and pulling straight outward on the fuse until it slides free of the fuse block. This fuse should only be replaced with a fuse of the same type (maxi blade type) and of the same amp rating or less.

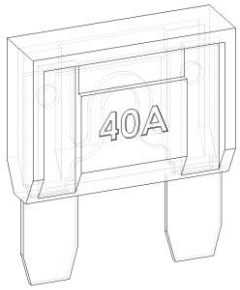

3.3 Safety Valve Service

The CKMP12V2 Portable Air Compressor comes factory equipped with a safety valve to relieve any excessive pressure from inside the system safely and automatically. This pressure could occur as a result of a fault in the pressure switch circuit, pressure generated from prolonged exposure to direct sunlight, accidental connection to a higher source of pressure, etc. If it becomes necessary to service this valve to change the relief pressure (i.e., use alternate spring) or clean the valve seat then it can be easily disassembled as follows.

- ☐ Using a 4mm hex key, unscrew the safety valve fitting from its socket.
- ☐ Remove the spring and poppet from inside the valve socket.
- ☐ Clean or replace the valve components as required.

NOTE: **Replacing safety valve parts with non-genuine ARB parts or modifying these parts in any way could change the relief pressure value, and is therefore not recommended.**

- ☐ Reassemble safety valve as below and tighten the fitting until the head of the fitting contacts the compressor head casting.

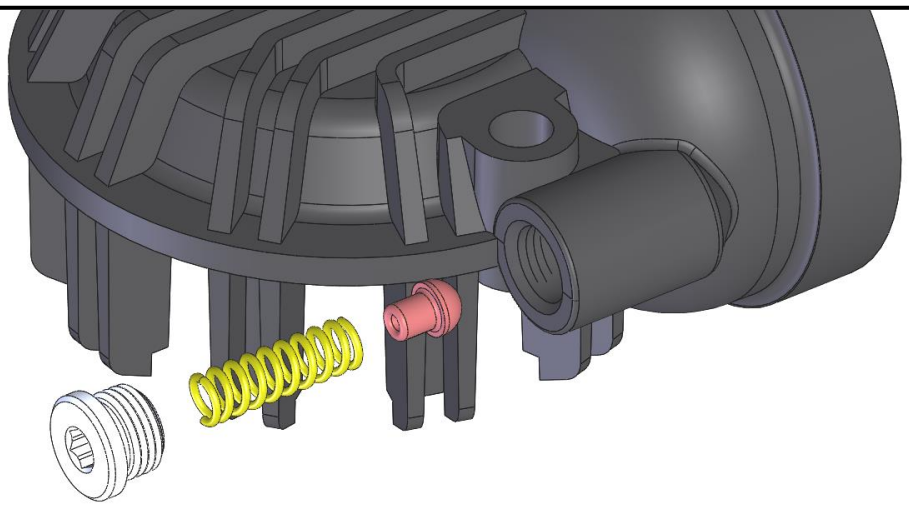

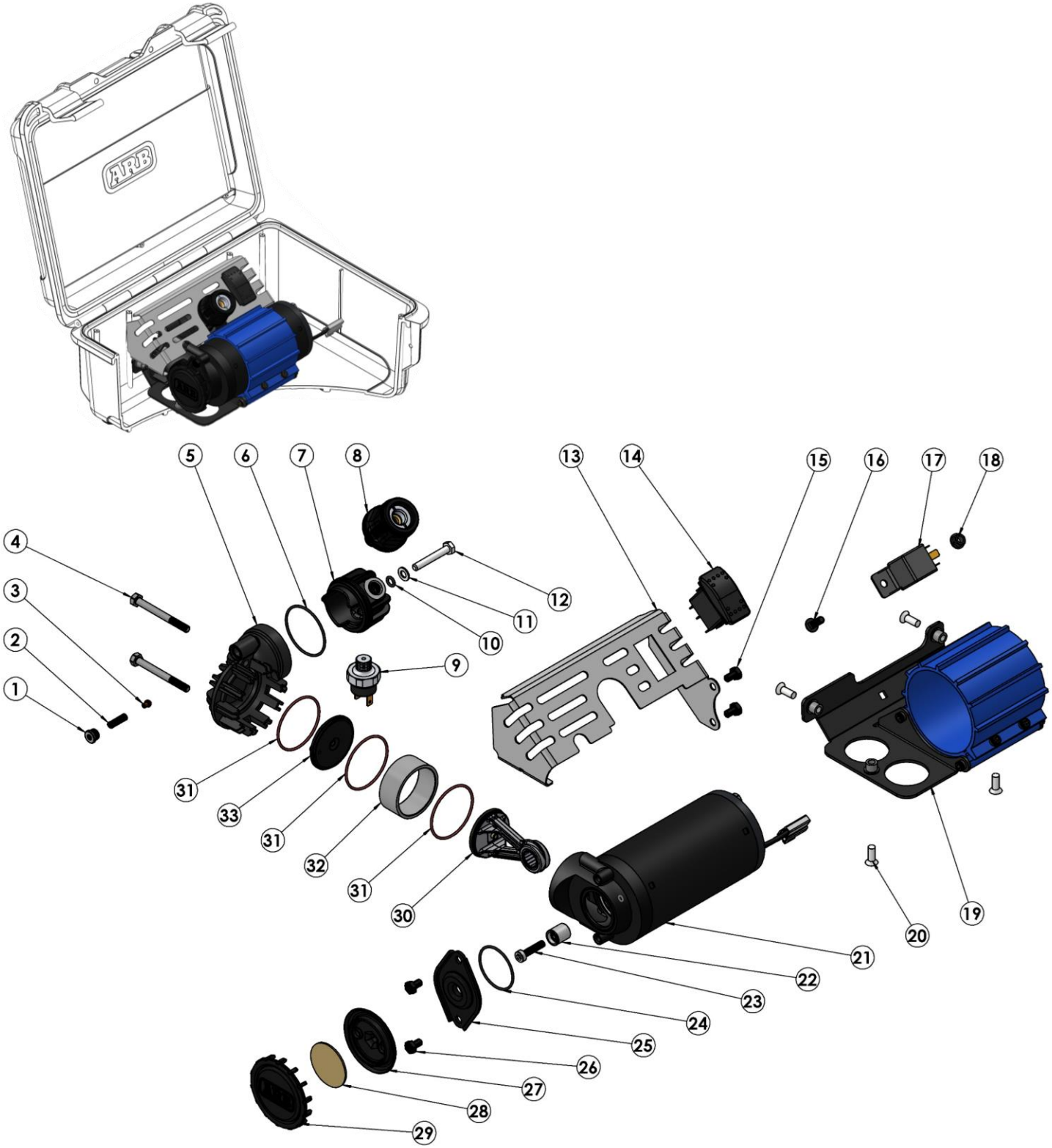
1
2
3
4
5
6
7
8
9
10
11
12
13
14
15
16
17
18
19
20
21
22
23
24
25
26
27
28
29
30
31
31
31
32
33

CKMP12V2

CKMP12V2 Portable Compressor Kit

ITEM #	QTY	DESCRIPTION	PART #	NOTES
1	1	SAFETY VALVE FITTING	320204	1
2	1	SAFETY VALVE SPRING	150115	1
3	1	SAFETY VALVE POPPET	320205	1
4	2	COMPRESSOR HEAD BOLT (M6 x 60)	200703	
5	1	HEAD ASSEMBLY	320102	1
6	1	O-RING (BS031N70)	160241	2
7	1	MANIFOLD CAP	320236	
8	1	HOSE COUPLING (US STD FEMALE)	171402	
9	1	PRESSURE SWITCH (1/4" NPT)	180916	
10	1	O-RING (METRIC 6X2 N70)	160242	2
11	1	FLAT WASHER	6151046	
12	1	MANIFOLD BOLT (M6 x 40)	6151270	
13	1	HEAT SHIELD	320238	
14	1	PORTABLE COMPRESSOR SWITCH	180221	
15	2	BOLT (M6 x 10mm)	6151496	
16	1	BOLT, COACH HEAD (M6 x 16)	6151438	
17	1	RELAY, 12V, 40A, SEALED	180905	
18	1	FLANGE NUT (M6)	6151173	
19	1	MOUNTING BRACKET	320121	
20	4	SCREW COUNTERSUNK (M6 x 16)	6151231	
21	1	MOTOR ASSEMBLY (12V)	320104	
22	1	AXLE	320232	3
23	1	AXLE CAP SCREW (M6 x 25)	200718	3,5
24	1	O-RING (BS029N70)	160250	2
25	1	AIR FILTER FLANGE (1/4" NPT)	320212	
26	2	BOLT (M6 x 10)	6151496	
27	1	AIR FILTER BASE	320501B	4
28	1	AIR FILTER ELEMENT DISC	290503	4
29	1	AIR FILTER COVER	320501A	4
30	1	PISTON ASSEMBLY (SERVICE KIT)	SEE NOTE	3
31	3	O-RING (BS032S70)	160247	2
32	1	BARREL	320201	3
33	1	VALVE PLATE ASSEMBLY	320105	
*	1	WIRING LOOM	180410	
*	1	CARRY CASE	270201	
*	1	RETAINING RING, DIN7993 RW-14	6151767	
*	1	HOSE	171301V2	
*	1	INFLATION ACCESSORY KIT	171303V2	
*	1	CARRY CASE POCKET	270108	

* *Not illustrated in exploded view.*

Specs:

Voltage	12 Volts
Current Draw	No-Load 13A
	Load 23A
Air Flow	75.1L/min @ 0kPa [2.65CFM @ 0psi]
	61.6L/min @ 200kPa [2.18CFM @ 29psi]
Total Weight	7.0kg [15.4lbs]
Size	356 x 308 x 182 mm (L x W x H)
	[14.02 x 12.13 x 7.17]
Manifold Port	$^1/_4$" NPT [Pressure Switch] x 1
Pressure Switch	Open 690kPa [100psi]
	Closed 490kPa [70psi]
Safety Valve	OPEN @ > ~1250Kpa [180 PSI]

Notes:

1 HEAD ASSY (5) comes pre-assembled with safety valve.

2 Complete set of O-ring seals is also available as O-ring Service Kit #320301.

3 PISTON ASSEMBLY (30) comes only as a service kit #320303 also containing the BARREL (32), AXLE (22), and CAP SCREW (23).

4 AIR FILTER BASE (27) & COVER (29) available only in AIR FILTER ASSY #320501 which also includes the filter element.

5 Thread lock must be applied to threads of CAP SCREW (23) and then torqued to 13 Nm [9.6ft-lb].

CAP SCREW (23) should never be re-used once it has been fully torqued once.