# START HERE!

# READ ME FIRST

Don't be a hero and muscle through this installation without reading these fitting instructions first! Improper installation of this gear may void certain aspects of your warranty.

Before you begin, take a moment and open all your Front Runner Rack Kit boxes and gather the assembly instructions for the various components.

A complete kit will contain:

1. Mounting System specific to your vehicle
2. Extrusions
3. Universal Structural Components

This document will guide you through the assembly of the Mounting System and assist you in fitting the Pro Bed Rack to your specific vehicle.

Please refer to the next page for a list of all the components, quantities and tools required.

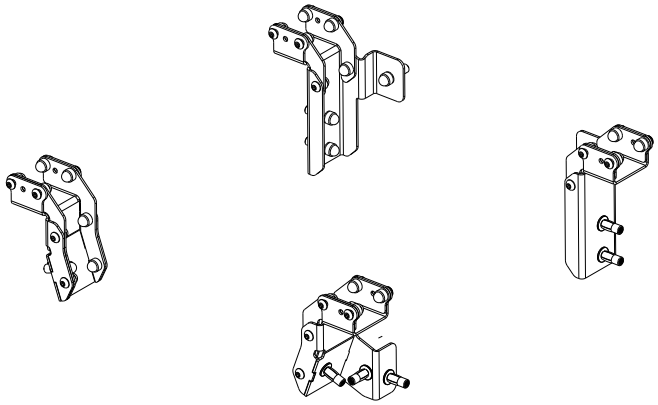

## IMPORTANT WARNING! ⚠

IT IS CRITICAL THAT ALL FRONT RUNNER PRODUCTS BE PROPERLY AND SECURELY ASSEMBLED AND ATTACHED TO YOUR VEHICLE. IMPROPER ATTACHMENT COULD RESULT IN AN AUTOMOBILE ACCIDENT, AND COULD CAUSE SERIOUS BODILY INJURY OR DEATH. YOU ARE RESPONSIBLE FOR ASSEMBLING AND SECURING ALL FRONT RUNNER PRODUCTS TO YOUR VEHICLE, CHECKING THE ATTACHMENTS PRIOR TO USE, AND PERIODICALLY INSPECTING THE PRODUCTS FOR ADJUSTMENT, WEAR AND DAMAGE. THEREFORE, YOU MUST READ AND UNDERSTAND ALL OF THE INSTRUCTIONS AND PRECAUTIONS SUPPLIED WITH YOUR FRONT RUNNER PRODUCT PRIOR TO INSTALLATION OR USE. IF YOU DO NOT UNDERSTAND ALL OF THE INSTRUCTIONS AND CAUTIONS, OR IF YOU HAVE NO MECHANICAL EXPERIENCE AND ARE NOT THOROUGHLY FAMILIAR WITH THE INSTALLATION PROCEDURES, YOU SHOULD HAVE THE PRODUCT INSTALLED BY A PROFESSIONAL INSTALLER OR OTHER QUALIFIED PERSONNEL.

NOTE: Front Runner will not be responsible for any damage caused by the failure to install the product according to these instructions.

Please call us if you have any questions about the installation of this product.

 © 2023 FRONT RUNNER VEHICLE OUTFITTERS

## 1 GET ORGANIZED

| IN THE BOX | | PBFF001 |
|---|---|---|
| 1 | 2 X | REAR MOUNTING BRACKET |
| 2 | 2 X | FRONT MOUNTING BRACKET |
| 3 | 4 X | REAR GUSSET |
| 4 | 4 X | FRONT GUSSET |
| 5 | 12 X | M8 X 16 X 1.6 FLAT WASHER |
| 6 | 12 X | M8 X 30 HEX BOLT |
| 7 | 12 X | M8 PLUS NUT |
| 8 | 12 X | M8 X 16 BUTTON HEAD SCREW |
| 9 | 28 X | M8 NYLOC NUT |
| 10 | 16 X | M8 X 20 BUTTON HEAD SCREW |
| 11 | 40 X | M8 NUT CAPS |
| 12 | 1 X | M8 x 70 HEX BOLT |
| 13 | 1 X | M8 NORMAL NUT |
| 14 | 2 X | M8 x 19 x 3 FLAT WASHER |

**TOOLS NEEDED**

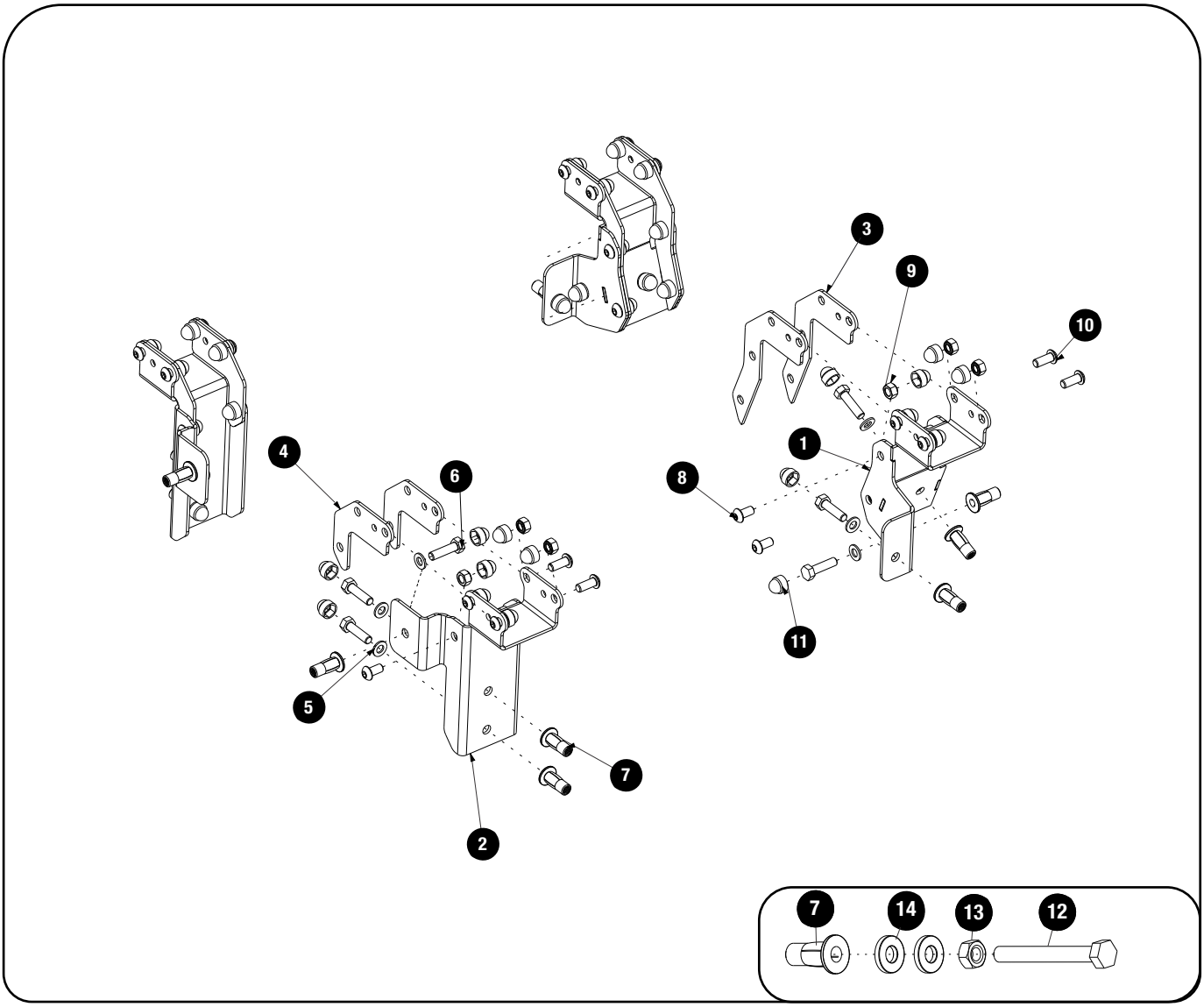


 © 2023 FRONT RUNNER VEHICLE OUTFITTERS

## 1 GET ORGANIZED

| IN THE BOX | | PBRA001 |
|---|---|---|
| 1 | 4 X | PRO BED RACK LEG |
| 2 | 2 X | PRO BED RACK REAR BRACE |
| 3 | 2 X | PRO BED RACK RH REAR WING BRACKET |
| 4 | 2 X | PRO BED RACK TOP TRUSS |
| 5 | 1 X | PRO BED RACK RH FRONT DIAGONAL BRACE |
| 6 | 1 X | PRO BED RACK LH FRONT DIAGONAL BRACE |
| 7 | 12 X | M6 x 16 BUTTON HEAD SCREW |
| 8 | 22 X | M6 NYLOC NUT |
| 9 | 22 X | M6 NUT CAP |
| 10 | 16 X | M8 x 20 BUTTON HEAD SCREW |
| 11 | 16 X | M8 x 19 x 2 FLAT WASHER |
| 12 | 16 X | M8 NYLOC NUT |
| 13 | 16 X | M8 NUT CAP |

| IN THE BOX | | PBRA001 |
|---|---|---|
| 14 | 6 X | M6 x 12 BUTTON HEAD SCREW |
| 15 | 2 X | FRONT HORIZONTAL BRACE |
| 16 | 1 X | FRONT CENTER BRACE |
| 17 | 4 X | M6 x 20 BUTTON HEAD SCREW |
| 18 | 8 X | M6 x 12 x 1 FLAT WASHER |
| 19 | 24 X | M6 x 25 THREAD FORMING SCREW |
| 20 | 1 X | T30 6" TORX BIT |

### TOOLS NEEDED

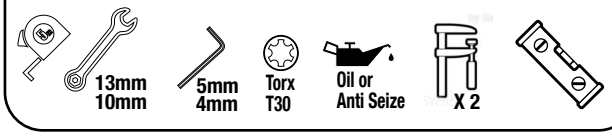


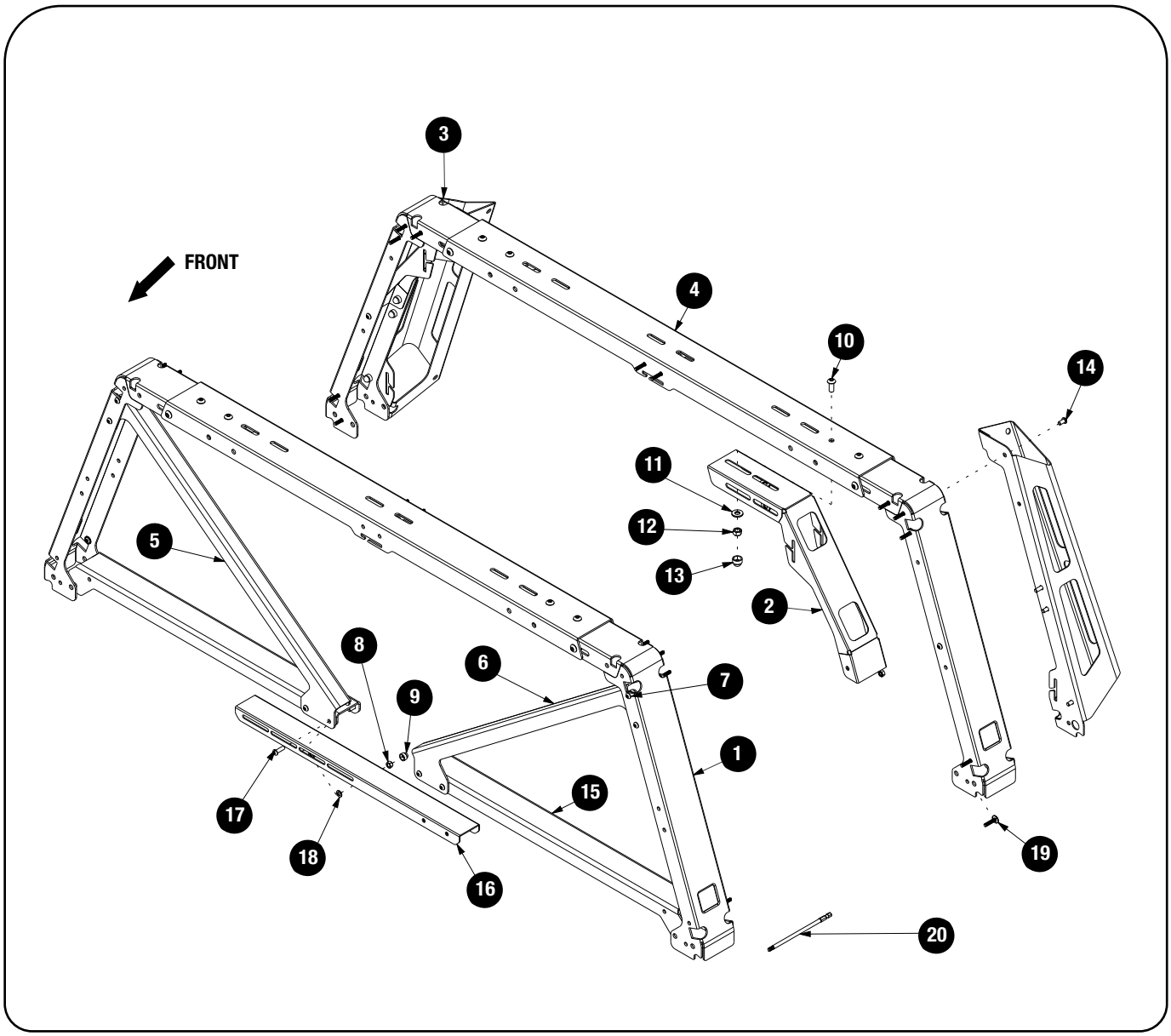


 © 2023 FRONT RUNNER VEHICLE OUTFITTERS

## 1 GET ORGANIZED

### IN THE BOX

| | | |
|---|---|---|
| 1 | 2 X | TOP EXTRUSION |
| 2 | 1 X | TOP MIDDLE EXTRUSION |
| 3 | 2 X | BOTTOM EXTRUSION |
| 4 | 2 X | 1450mm PSA STRIP PE60 |

### TOOLS NEEDED

Friend

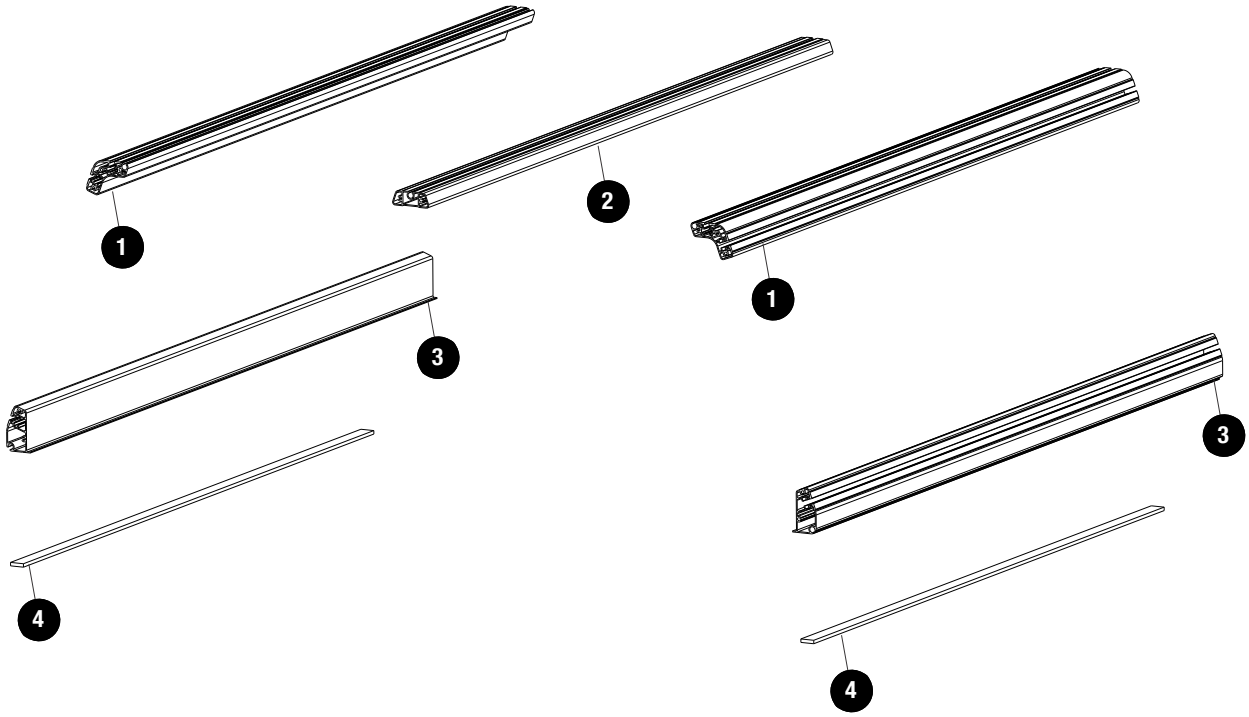


 © 2023 FRONT RUNNER VEHICLE OUTFITTERS

## 2 FIT AND SECURE

**2.1**

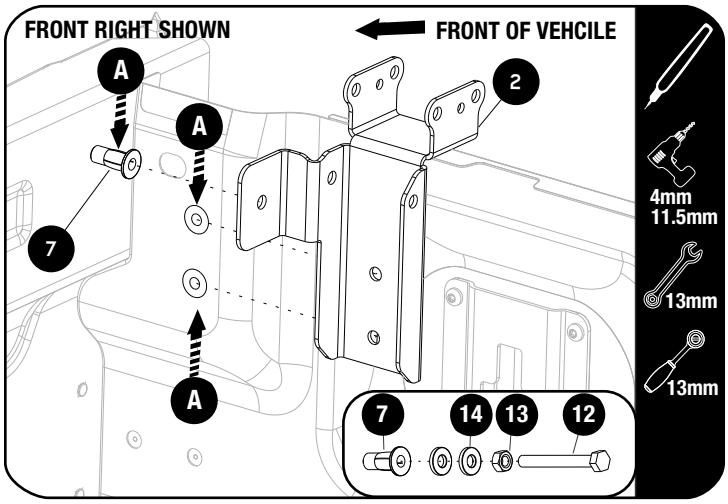


Place the Front Vehicle Mounting Brackets (Item 2) (RH shown) on the top ledge and push them up against the front load bed wall. Mark the 3 mounting holes (indicated by A) per side.

**2.2**

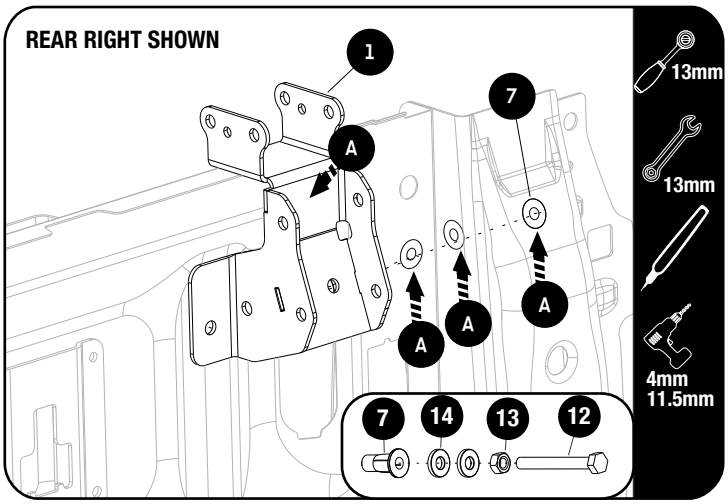


Position the Rear Vehicle Mounting Brackets (Item 1) onto the top ledge and push up against the rear load bed pillar. Mark the 3 mounting holes (indicated by A). Do this on both the LH & RH side.

Use a 4mm bit and drill a pilot hole before opening to 11.5mm.

Insert the Plus Nuts (Item 7) into the holes drilled in 2.1.

**Check youtube for assistance in setting a plus nut.**

Using the M8x70 Hex Bolt, thread a M8 Nut half way up the bolt threads. (Item 12 & 13) Place two M8x19x3 Washers (Item 14) onto the nut before threading the M8 Plus Nut (Item 7) onto the bolt. Place the assembly into one of the holes. Use a 13mm wrench to hold the M8 Nut securely in place and use a ratchet / cordless driver with a 13mm socket to turn and set the Plus Nut in place .

DO NOT FIT THE MOUNT BRACKETS AT THIS STAGE.

**2.3**

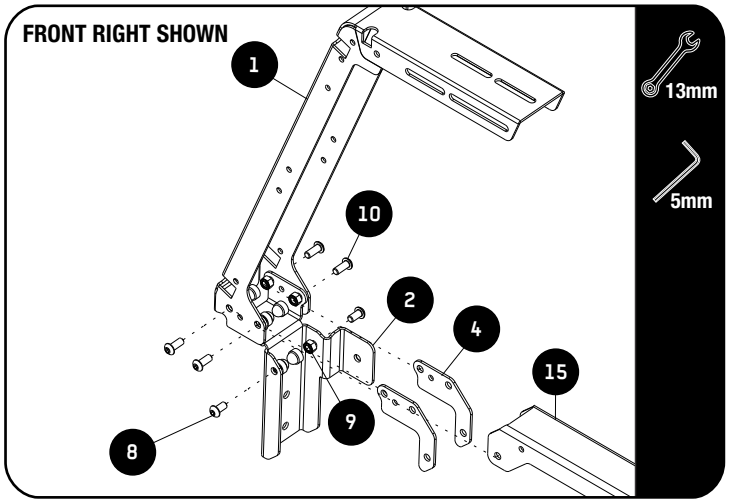


On a suitable flat surface, assemble the Pro Bed Leg (Item 1) to the Front Mounting Brackets (Item 2) and the Front Horizontal Brace and Front Gusset (Item 4 & 15) using M8 x 20 button Head screws and M8 Nyloc Nuts (Item 9 & 10).

Loosely fit the M8 x 16 Button Head screws and M8 Nyloc Nuts (Item 8 & 9) as shown.

Do this with both the LH and RH side.

DO NOT FULLY TIGHTEN.

.


© 2023 FRONT RUNNER VEHICLE OUTFITTERS

## 2 FIT AND SECURE

**2.4**

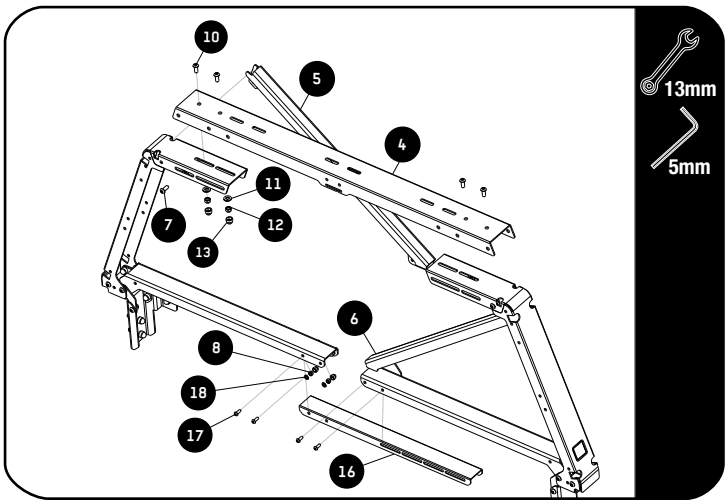


**Assemble the Front Diagonal and Horizontal Brace parts as shown (Item 4,5 & 6) to the legs fitted in 2.2 using the M8x20 Button head screws,M8x19x2 Flat washer and M8 Nyloc Nut (Item 10,11 &12).**

**FULLY TIGHTEN / DO NOT TIGHTEN TOP TRUSS.**

**Use the M6x20 Button head Screws,M6x12x1 Flat washer and M6 Nyloc Nut (Item 8,17 & 18)to fit the Front Center Brace to the LH and RH Front Horizontal Braces (Item 16).**

**DO NOT FULLY TIGHTEN**

**Tightening Torque:**

**M8 : 15-20Nm / 11.06 ft lb - 14.75 ft lb**

**2.5**

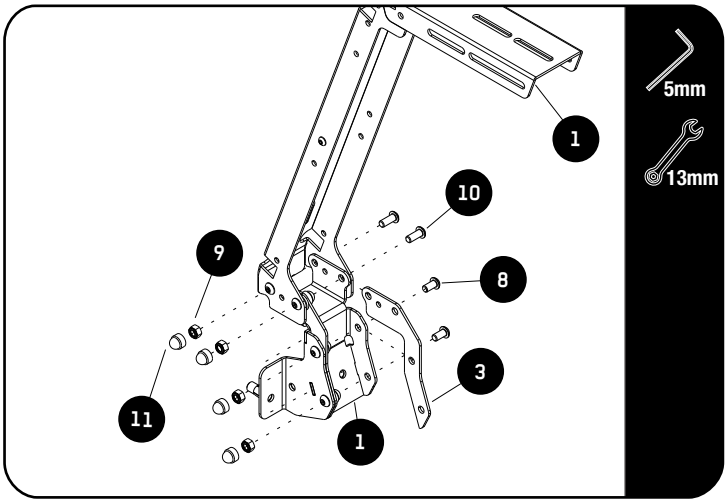


**Assemble the Pro Bed Leg (Item 1) to the Rear Mounting Bracket (Item 1) together with the Rear Gusset (Item 3 using M8 x 20 button Head screws and M8 Nyloc Nuts (Item 9 & 10).**

**Loosely fit the M8 x 16 Button Head screws and M8 Nyloc Nuts (Item 8 & 9) as shown.**

**Do this on both the LH and RH side.**

**Fully Tighten.**

**Tightening Torque:**

**M8 : 15-20Nm / 11.06 ft lb - 14.75 ft lb**

**2.6**

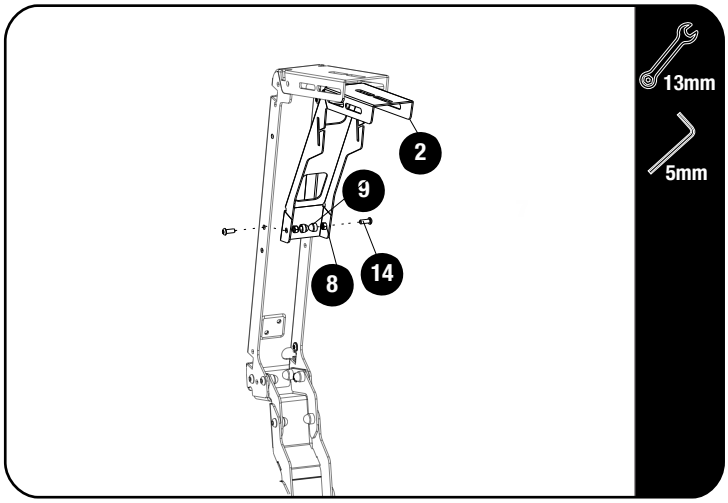


**Fit the Rear Brace (Item 2) using the M6x12 button head screws and M6 Nyloc nuts (Item 14 & 8).**

**Fully tighten and place M6 Nut caps (Item 9) on the M6 Nyloc Nuts**

**Tightening Torque:**

**M8 : 15-20Nm / 11.06 ft lb - 14.75 ft lb**


© 2023 FRONT RUNNER VEHICLE OUTFITTERS

## 2 FIT AND SECURE

**2.7**

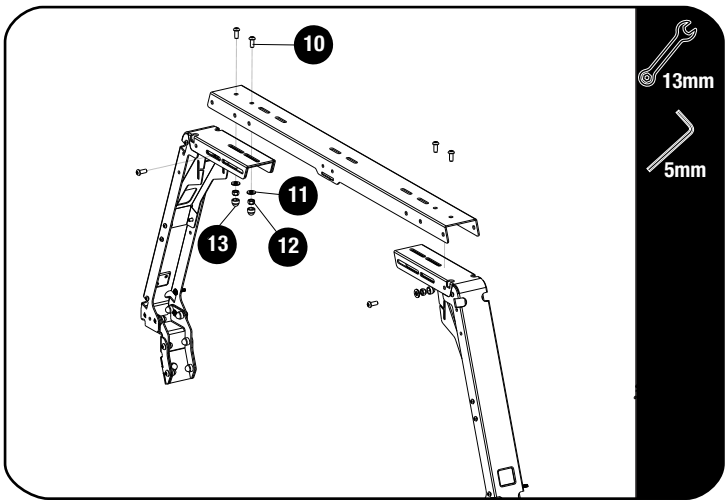


Loosely assemble the Rear Top Truss using the M8x20 Button head screws, M8x19x2 Flat washer and M8 Nyloc Nuts (Item 10,11&12).

Fully tighten the M8 Button Heads and place M8 Nut Caps on the M8 Nyloc Nuts (Item 13).

**Tightening Torque:**

M8 : 15-20Nm / 11.06 ft lb - 14.75 ft lb

**2.8**

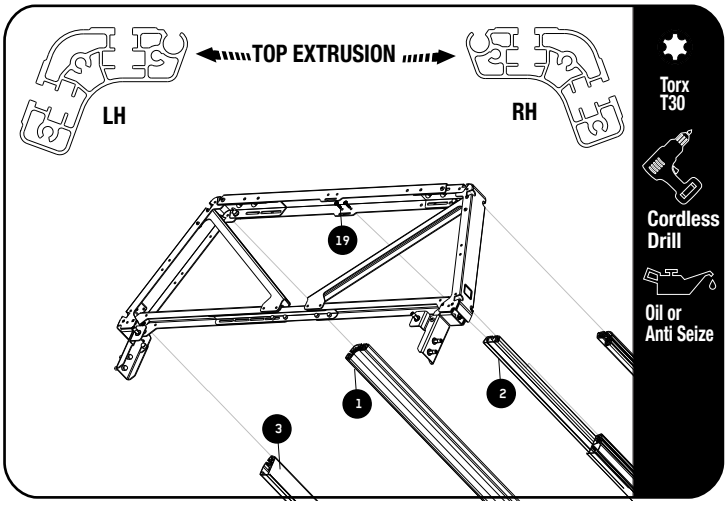


Take note of extrusion orientation !

Using the supplied T30 6" torx bit and a cordless driver fit the extrusion using the M6x25 thread forming screws (Item 19).Use a slow and constant speed when using the cordless driver.

Use a little anti seize or oil on screw threads before inserting. Note these are Thread Forming Screws.

**Tightening Torque:**

M6 : 8-10Nm / 5.9 ft lb - 7.38 ft lb

**2.9**

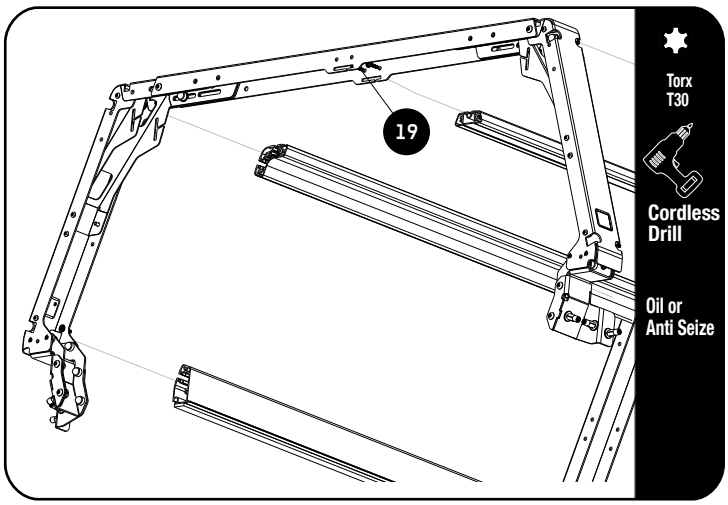


Assemble the rear Pro Bed Legs assembly to the extrusions assembled in 2.8 using the M6x25 Thread Forming screws, T30 Torx bit and a cordless driver.

Use a little anti seize or oil on screw threads before inserting. Note these are Thread Forming Screws.

**Tightening Torque:**

M6 : 8-10Nm / 5.9 ft lb - 7.38 ft lb


© 2023 FRONT RUNNER VEHICLE OUTFITTERS

## 2 FIT AND SECURE

**2.10**

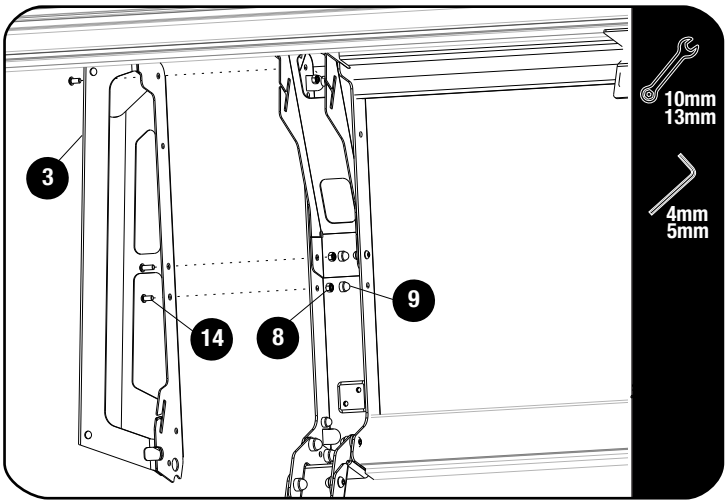


Assemble the Rear Wing Brackets (Item 3) using the M6x12 Button head screws and M6 Nyloc Nuts (Item 14 & 8).

Place the M6 Nut caps (Item 9) over the nyloc nuts.

**Tightening Torque:**

M6 : 8-10Nm / 5.9 ft lb - 7.38 ft lb

**2.11**

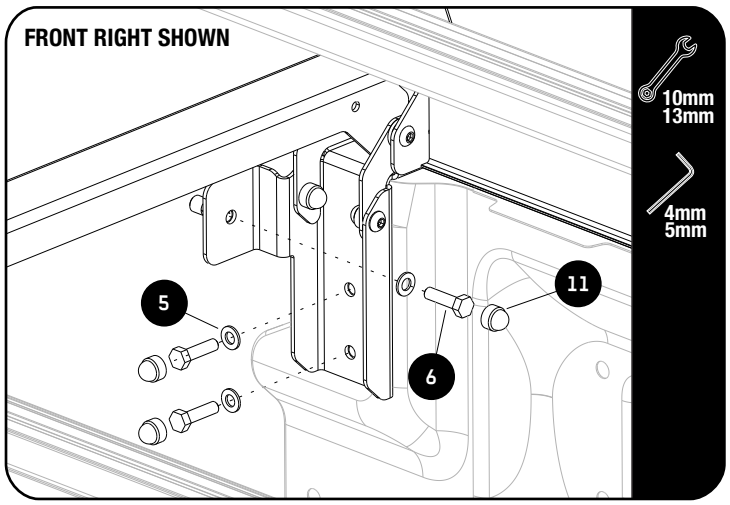


With the help of a friend, lift and position the Pro Bed Assembly over the load bed and lower into position. Pull the sides outward if needed to reach the plus nut mount points installed earlier.

Secure Front (shown) and Rear Vehicle Mounts using M8x19x2 Flat Washers and M8x30 Hex Bolts (Item 5 & 6).

Check that the top truss screws are in the correct holes and slots to allow the truss to sit level.

**2.12**

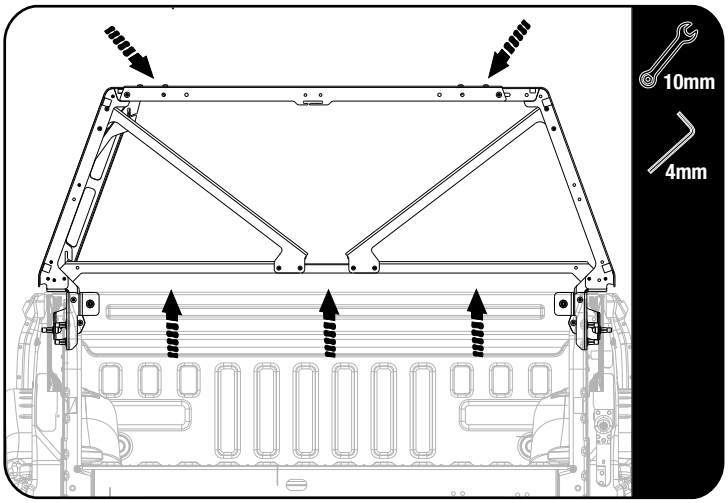


Using clamps and a spirit level clamp the spirit level to the inside of the Front Center Brace and Tighten the M6x20 Button head screws and M6 Nyloc Nuts fitted in 2.3.

Place M6 Nut caps on the M6 Nyloc Nuts.

Fully tighten the top M8 button head bolts..

**Tightening Torque:**

M8 : 15-20Nm / 11.06 ft lb - 14.75 ft lb


© 2023 FRONT RUNNER VEHICLE OUTFITTERS

## 2 FIT AND SECURE

2.13

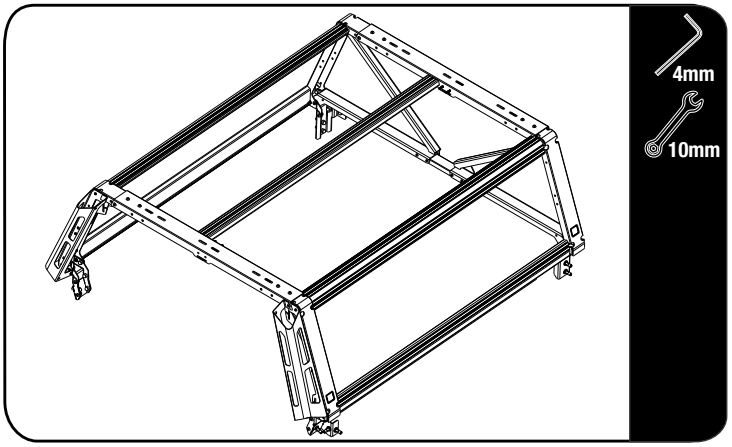


Fully tighten all the bolts and nuts and place nut caps where needed.

## 3 COMPLETION

3.1

Congratulations! You did it. Take a step back and admire your work!

## 4 INSTALL OTHER VEHICLE AND RACK ACCESSORIES

Now's the time to visit your favorite Front Runner dealer in person or online.

## IMPORTANT!

FRONT RUNNER RACK KITS OFTEN HAVE A HIGHER LOAD RATING THAN THE VEHICLES THEY ARE MOUNTED TO. PLEASE REFER TO YOUR SPECIFIC VEHICLE MANUFACTURER FOR A RECOMMENDED ROOF RATING. FRONT RUNNER CANNOT BE RESPONSIBLE FOR IMPROPER LOADING BEYOND THE VEHICLE MANUFACTURER'S STATED LOAD CAPACITY.

**Be sure to tag us. We love to see our gear in action! #FrontRunnerOutfitters #BornToRoam**

**Share your adventures on:**


© 2023 FRONT RUNNER VEHICLE OUTFITTERS